ELECTRIC TOOL PARTS LIST

■ CORDLESS NAILER
Model NR1890DCBQRY

2026 • 10 • 02
(E1)

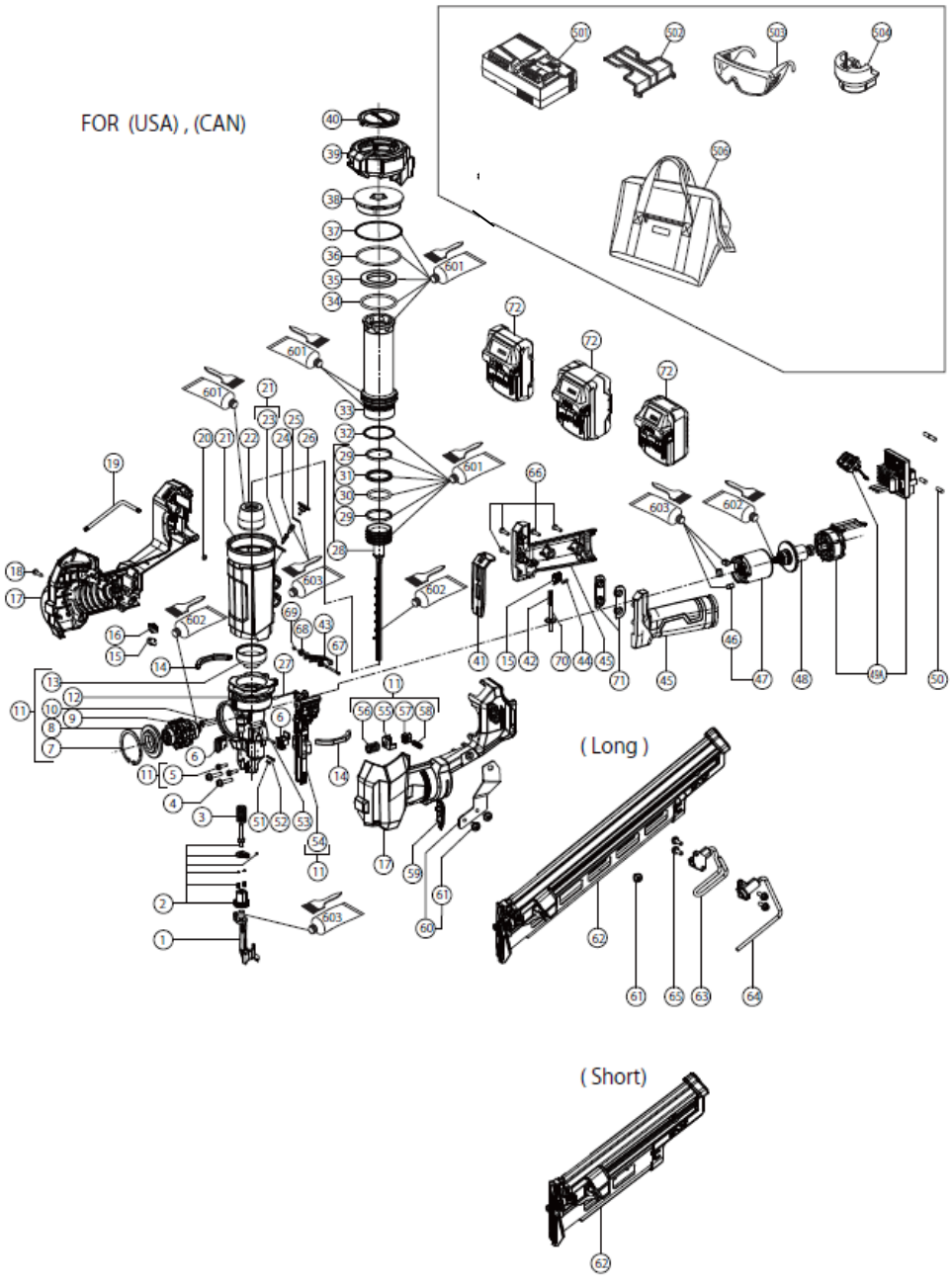

MODEL
NR1890DCB(1/2)

Rev.2
26.10.2026

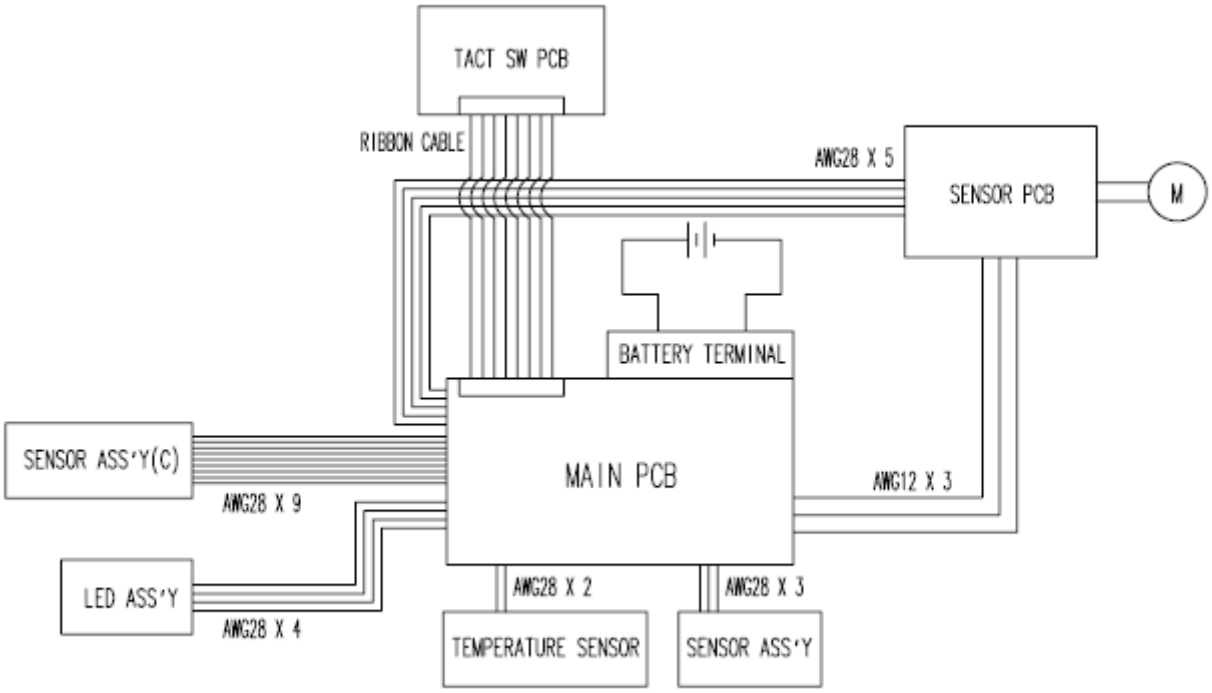
TACT SW PCB
RIBBON CABLE
AWG28 X 5
SENSOR PCB
M
BATTERY TERMINAL
SENSOR ASS'Y(C)
MAIN PCB
AWG12 X 3
AWG28 X 9
LED ASS'Y
AWG28 X 2
AWG28 X 3
AWG28 X 4
TEMPERATURE SENSOR
SENSOR ASS'Y

PARTS

NR1890DCBQRY

ITEM NO.	CODE NO.	DESCRIPTION	NO. USED	REMARKS
1	384312	PUSHING LEVER	1	
2	384910	ADJUSTER ASS'Y	1	
3	372307	PUSHING LEVER SPRING (B)	1	
4	382728	TORX FLANGE BOLT M5X22	2	
5	372311	NYLOCK BOLT (W/FLANGE) M4X14	2	
6	384315	SENSOR ASS'Y (C)	1	
7	372332	RETAINING RING D52	1	
8	384316	BEARING COVER	1	
9	384317	PIN WHEEL ASS'Y	1	
10	372310	NYLOCK BOLT (W/FLANGE) M4X25	1	
11	384318	NOSE ASS'Y	1	INCLUD.5.7-10.12.13.54-58
12	384319	NOSE	1	
13	384911	NOSE SLEEVE	1	
14	382386	RUBBER CUSHION (A)	2	
15	384320	SWITCH LED ASS'Y	1	
**16	384946	SENSOR ASS'Y	1	FOR USA.CAN
**17	384322	HOUSING	1	FOR USA.CAN
**18	301653	TAPPING SCREW (W/FLANGE) D4X20 (BLACK)	15	FOR USA.CAN
19	382494	TORX BAR WRENCH	1	
20	382821	O-RING (I.D 3.8)	1	
**21	384912M	CYLINDER HOUSING	1	INCLUD.23 FOR USA.CAN
22	384324	PISTON BUMPER	1	
23	382125	VALVE CORE	1	
24	382124	VALVE CORE CUSHION	1	
25	884112	O-RING (I.D 10.7)	1	
26	384325	CHARGE CAP	1	
27	384931	NTC SENSOR	1	
28	384913	PISTON ASS'Y (A)	1	INCLUD.29-31
29	384914	SLIDE RING	2	
30	382384	O-RING	1	
31	382383	X-RING	1	
32	384936	O-RING	1	
33	384327	CYLINDER	1	
34	384328	O-RING	1	
35	384329	RUBBER WASHER	1	
36	384330	O-RING G65	1	
37	384915	O-RING	1	
38	384331	CYLINDER CAP	1	
39	384332	CYLINDER COVER	1	
40	384333	BACK COVER	1	
**41	384923	HANDLE CUSHION	1	FOR USA.CAN
**42	384916	SPRING (T)	1	FOR USA.CAN
**43	876203	TRIGGER	1	FOR USA.CAN
44	371020	O-RING (I.D 2.5)	2	
**45	384338	HANDLE	1	FOR USA.CAN
46	372342	BUMPER (B)	3	
47	384339	GEAR BOX ASS'Y	1	INCLUD.46
48	361256	ROTOR	1	
**49	341250	WIRING ASS'Y	1	FOR USA.CAN

ITEM NO.	CODE NO.	DESCRIPTION	NO. USED	REMARKS
50	384340	RUBBER PLUG	4	
51	372304	ROLL PIN D2.5X8	1	
52	384341	ROLL PIN D2.5X20	1	
53	878965	ROLL PIN D2.5X16	1	
54	384343	BLADE GUIDE A ASS'Y	1	
55	384932	BLADE GUIDE PIECE	1	
56	384933	SPRING (BG)	1	
57	384934	BLADE LOCK PIECE	1	
58	384935	SPRING (BL)	1	
**59	384344	SERVICE COVER	1	FOR USA.CAN
**60	384347	MAGAZINE PLATE ASS'Y	1	INCLUD.61
61	382730	TORX FLANGE BUTTON BOLT M6X12	3	
**62	384345	MAGAZINE SUB ASS'Y (LONG)	1	FOR USA.CAN
**62	384346	MAGAZINE SUB ASS'Y (SHORT)	1	FOR USA.CAN
63	384348	HOOK ASS'Y	1	
64	382837	HOOK	1	
65	382727	TORX FLANGE BOLT M5X15	4	
**66	384337	SCREW M4X16	4	FOR USA.CAN
**67	889096	TRIGGER PIN	1	FOR USA.CAN
**68	384917	SPACER BUSH	2	FOR USA.CAN
**69	883405	O-RING (I.D 1.8)	1	FOR USA.CAN
**70	384336	SWITCH ROD	1	FOR USA.CAN
**71	384918	SPACER PLATE	2	FOR USA.CAN
**72	383581M	BATTERY BSL 3650MVT (USA.CAN)	1	FOR USA.CAN

STANDARD ACCESSORIES

NR1890DCBQRY

ITEM NO.	CODE NO.	DESCRIPTION	NO. USED	REMARKS
501			1	
502	329897	BATTERY COVER	1	
503	875769	PROTECTIVE GLASSES	1	
504	382493	NOSE CAP	1	
**506	384716M	BAG ASS'Y	1	FOR USA.CAN

OPTIONAL ACCESSORIES

ITEM NO.	CODE NO.	DESCRIPTION	NO. USED	REMARKS
601	382756	GREASE (SYNTHESO GLEP1) 35G	1	
602	325149	GREASE (MOLUB-ALLOY NO.777-1) 75G	1	
603	317918	GREASE (ATTOLUB NO.2) 500G	1	
**604	384002M	AIR REFILL VALVE	1	FOR USA.CAN
**605	384003M	MAINTENANCE JIGS KIT	1	FOR USA.CAN
**607	384005M	WEARABLE MAINTENANCE PARTS KIT	1	FOR USA.CAN