metabo HPT

ELECTRIC TOOL PARTS LIST

■ IMPACT DRIVER 2021 • 08 • 23

Model WH 36DC (E1)

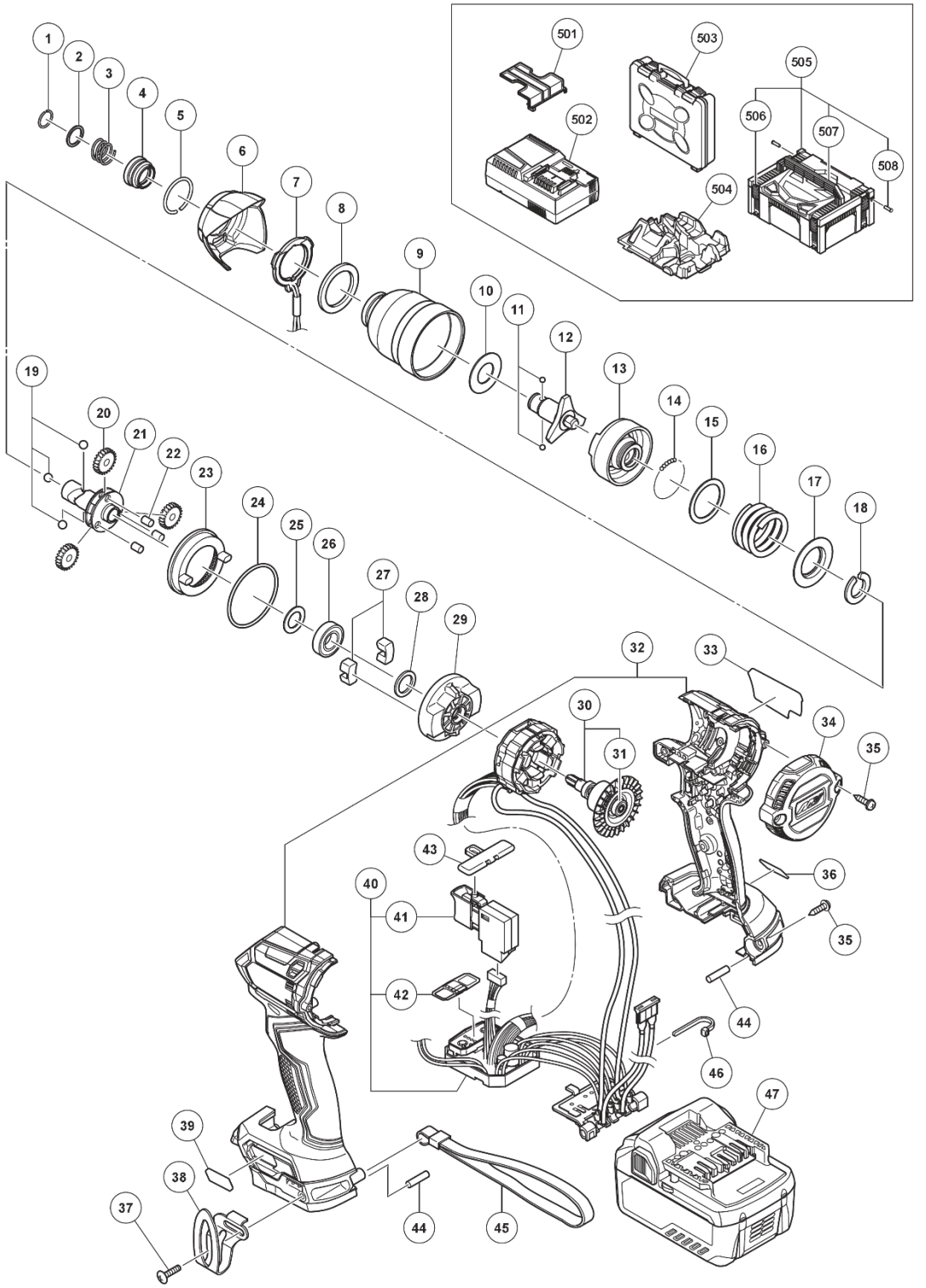

MODEL
WH36DC

Rev.1

PARTS

WH36DC

ITEM NO.	CODE NO.	DESCRIPTION	NO. USED	REMARKS
1	330619	RETAINING RING	1	
2	330856	WASHER (D)	1	
3	370581	GUIDE SPRING	1	
4	376528	GUIDE SLEEVE	1	
5	373156	CIRCLIP	1	
6	377888	PROTECTOR	1	
7	376606	LED-LIGHT	1	
8	376608	SPONGE	1	
9	376545	HAMMER CASE	1	
10	376532	WASHER (F)	1	
11	319535	STEEL BALL D3.5 (10 PCS.)	2	
**12	377890	ANVIL (S)	1	
13	376530	HAMMER	1	
14	329303	STEEL BALL D2.5 (10 PCS.)	36	
15	376533	WASHER (J)	1	
16	376534	HAMMER SPRING	1	
17	316172	WASHER (S)	1	
18	328647	STOPPER (C)	1	
19	959154	STEEL BALL D5.556 (10 PCS.)	3	
20	370584	IDLE GEAR SET (3 PCS.)	3	
21	376531	SPINDLE	1	
22	370585	NEEDLE ROLLER	3	
23	376535	RING GEAR	1	
24	983852	O-RING (S-42)	1	
25	370583	WASHER (E)	1	
26	323118	BALL BEARING 6901VV-N	1	
27	333952	DAMPER	2	
28	376609	FELT (B)	1	
29	376536	INNER COVER	1	
30	377891	ROTOR PINION ASS'Y	1	INCLUD.31
31	335723	BALL BEARING 604DD	2	
**32	377892M	HOUSING (A).(B) SET (AGGRESSIVE GREEN)	1	FOR USA.CAN
33		LABEL	1	
34	376542	TAIL COVER	1	
35	313687	TAPPING SCREW (W/FLANGE) D3X16 (BLACK)	10	
36	373913	MV LABEL (A)	1	
37	327001	TRUSS HD. SCREW M4 (BLACK)	1	
38	372229	HOOK	1	
39	373914	MV LABEL (B)	1	
40	377893	WIRING ASS'Y	1	INCLUD.7.41.42
41	376527	DC-SPEED CONTROL SWITCH	1	
42	377894	PANEL SHEET (B)	1	
43	324225	PUSHING BUTTON (B)	1	
44	373041	REAR BUMPER	2	
45	306952	STRAP (BLACK)	1	
46	6696839	WIRE BAND	1	
**47	371751M	BATTERY BSL 36A18 (USA.CAN)	2	INCLUD.501

STANDARD ACCESSORIES

WH36DC

ITEM NO.	CODE NO.	DESCRIPTION	NO. USED	REMARKS
501	329897	BATTERY COVER	1	
502	UC18YSL3	CHARGER	1	
**503	339778	CASE	1	

OPTIONAL ACCESSORIES

ITEM NO.	CODE NO.	DESCRIPTION	NO. USED	REMARKS
**601	321823	DRILL CHUCK AND ADAPTER SET	1	INCLUD.602.603 EXCEPT FOR CHN
**602	307543	CHUCK ADAPTER	1	EXCEPT FOR CHN
**603	987575	CHUCK WRENCH FOR 10VLB-D.10VLR-D	1	EXCEPT FOR CHN
605	306927	SILICONE RUBBER	1	
606	309922	GREASE (ATTOLUB MS NO.2) 500G	1	
607	325149	GREASE (MOLUB-ALLOY NO.777-1) 75G	1	
608	930038	GREASE (SEP-3A)(2.5KG)	1	
609	930035	GREASE (SEP-3A) (100G)	1	