metabo HPT

LIST NO. K802

ELECTRIC TOOL PARTS LIST

■ CHARGER

2015· 6 ·22

Model UC 18YSL3

(E1)

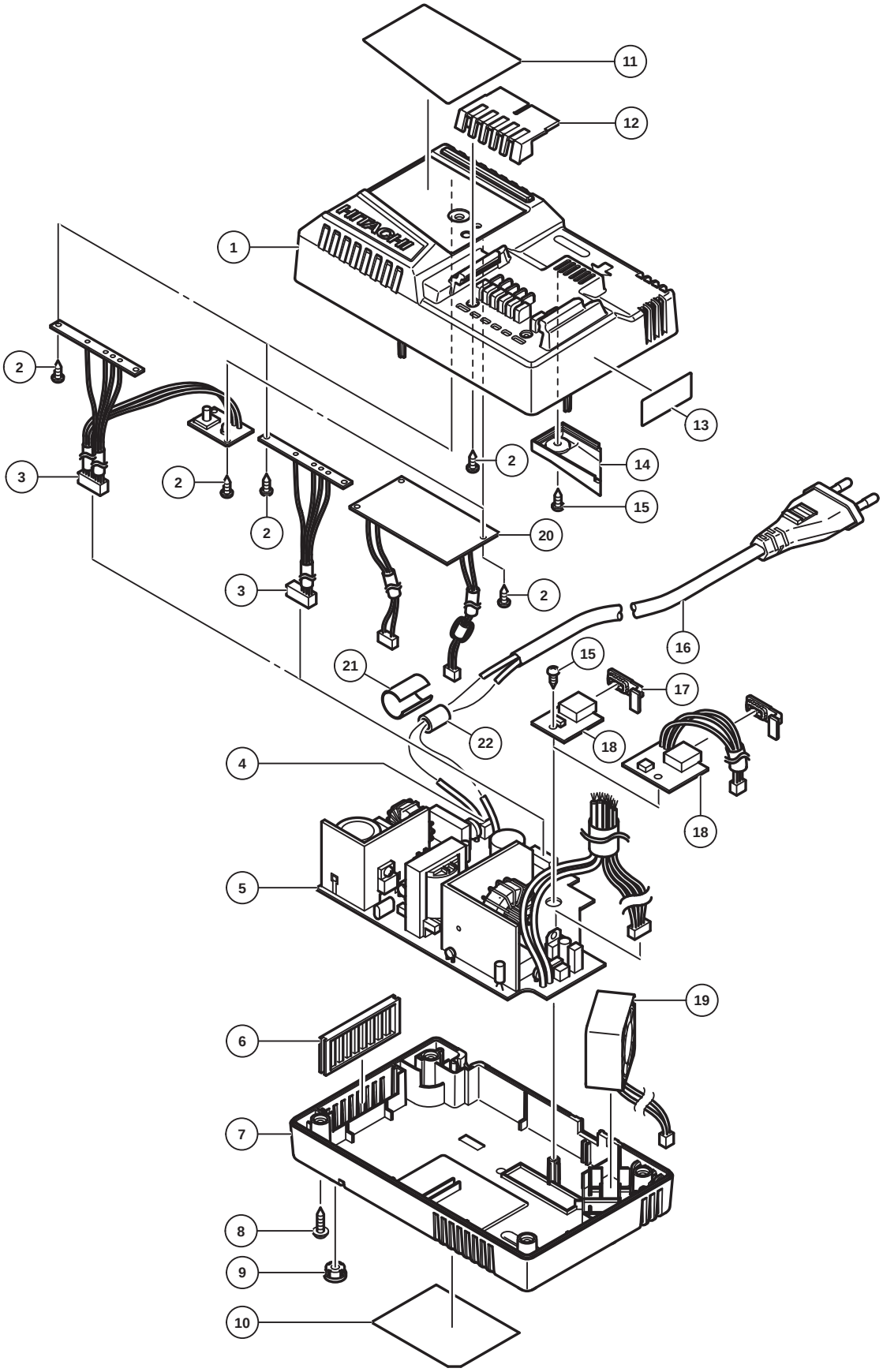

	ITEM NO.	CODE NO.	DESCRIPTION	NO. USED	REMARKS	
	1	338710	CASE (A)	1		
*	2	339341	TAPPING SCREW (W/FLANGE) D2 X 8 (BLACK)	7		
*	2	339341	TAPPING SCREW (W/FLANGE) D2 X 8 (BLACK)	6	FOR USA,CAN	
*	3	339339	LED-SWITCH PCB	1		
*	3	338723	LED-SWITCH PCB	1	FOR USA,CAN	
	4	338726	FUSE	1		
*	5	338721	PCB ASS'Y (EUROPE,AUS,ASIA)	1	INCLUD.4	
*	5	338720	PCB ASS'Y (USA)	1	INCLUD.4 FOR USA,CAN	
	6	338725	FILTER	1		
	7	338712	CASE (B)	1		
	8	326358	TAPPING SCREW (W/FLANGE) D3 X 18	4		
	9	338717	RUBBER (A)	5		
	10		NAME PLATE	1		
*	11	339340	HITACHI LABEL	1		
*	11	338714	HITACHI LABEL	1	FOR USA,CAN	
	12	338715	COVER	1		
*	13		NAME PLATE	1	FOR AUS,NZL	
	14	338716	AIR DUCT	1		
	15	327174	TP TAPPING SCREW D3 X 8	2		
*	16	500506Z	CORD	1		
*	16	500507Z	CORD	1	FOR GBR,HKG,SAU	
*	16	500508Z	CORD	1	FOR AUS,NZL	
*	16	500499Z	CORD	1	FOR USA,CAN	
*	16	500509Z	CORD	1	FOR CHN	
	17	338718	USB CAP	1		
*	18	339338	USB PCB (B)	1		
*	18	338722	USB PCB	1	FOR USA,CAN	
	19	338724	FAN	1		
*	20	339337	USB PCB (A)	1	EXCEPT FOR USA,CAN	
*	21	339343	SUPPORT (D)	1	EXCEPT FOR USA,CAN	
*	22	339342	FERRITE CORE	1	EXCEPT FOR USA,CAN	