Tanaka Illustrated Parts Manual

Model Number:

TIA-350PFS

ONE MAN EARTH AUGER

P/N 41120
Rev 000
Date 9/9/08

Nikko Tanaka Engineering U.S.A.,Ltd.• 1028 4th Street SW, Bldg B • Auburn, WA 98001 • Phone: (253) 333-1200 • Fax: (253) 333-1212

www.tanakapowerequipment.com

custsvc@nikko-tanaka-usa.com

CYLINDER, PISTON, CRANKSHAFT & IGNITION • FIGURE 1

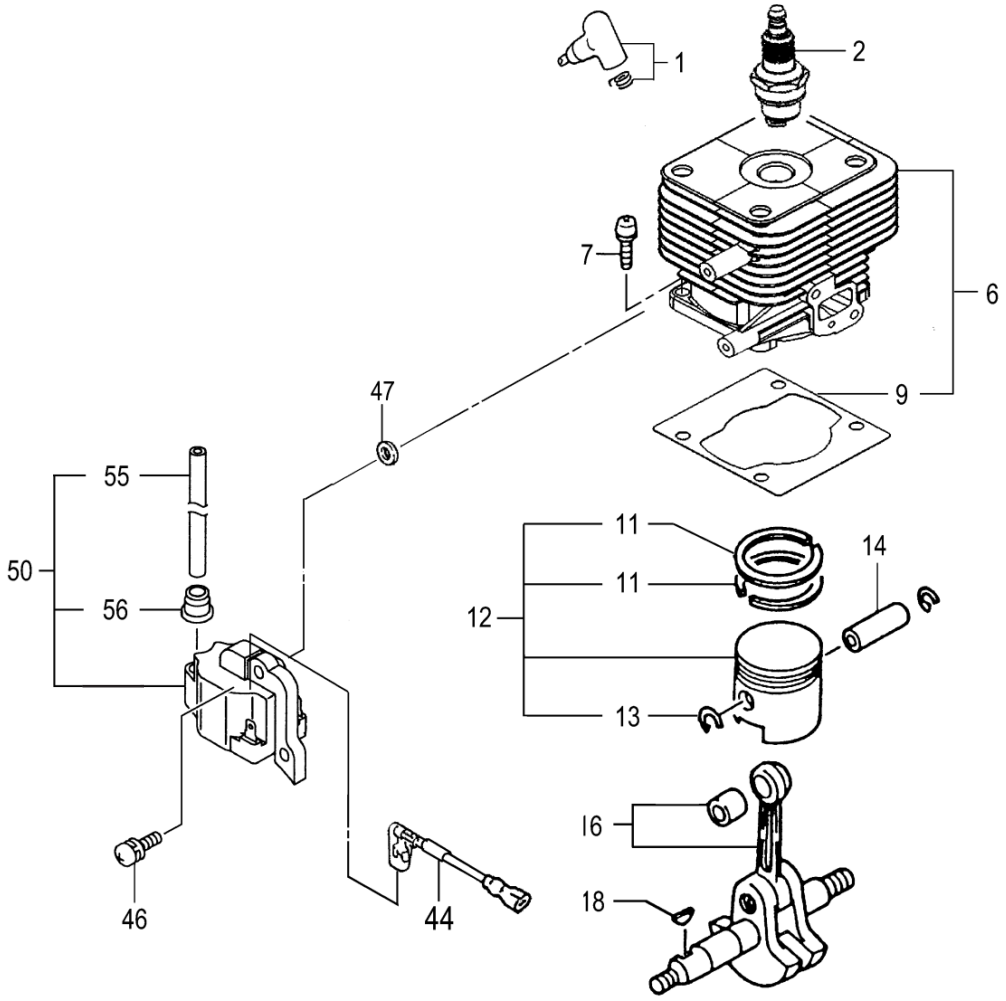

ITEM	PART NUMBER	DESCRIPTION	QTY	COMMENTS
1-1	15701570900	CAP,SPARK PLUG,ASSEMBLY	1	
1-2	0181161021	PLUG,SPARK	1	
1-6	0010725090	CYLINDER SET	1	Includes gasket
1-7	99461050164	BOLT,HEX,5X16,S	4	
1-9	0170725020	GASKET,CYLINDER	1	
1-11	04101730200	RING,PISTON	2	
1-12	0300703091	PISTON SET	1	Includes rings and circlips
1-13	03900000201	CIRCLIP,PISTON PIN	2	
1-14	03701400200	PIN,PISTON	1	
1-16	0460703A81	CRANKSHAFT	1	
1-18	06810100200	KEY,WOODRUFF,3X13X4.5	1	
1-44	1780703B80	CORD,STOP B	2	
1-46	99464040184	BOLT,HEX 4x18WS	2	
1-47	1820186A201	WASHER,SPECIAL	2	
1-50	1672201290	COIL,IGNITION	1	
1-55	1782201220	WIRE,HIGH TENSION	1	
1-56	56020517200	CAP,RUBBER	1	

CRANKCASE, FLYWHEEL & FAN CASE • FIGURE 2

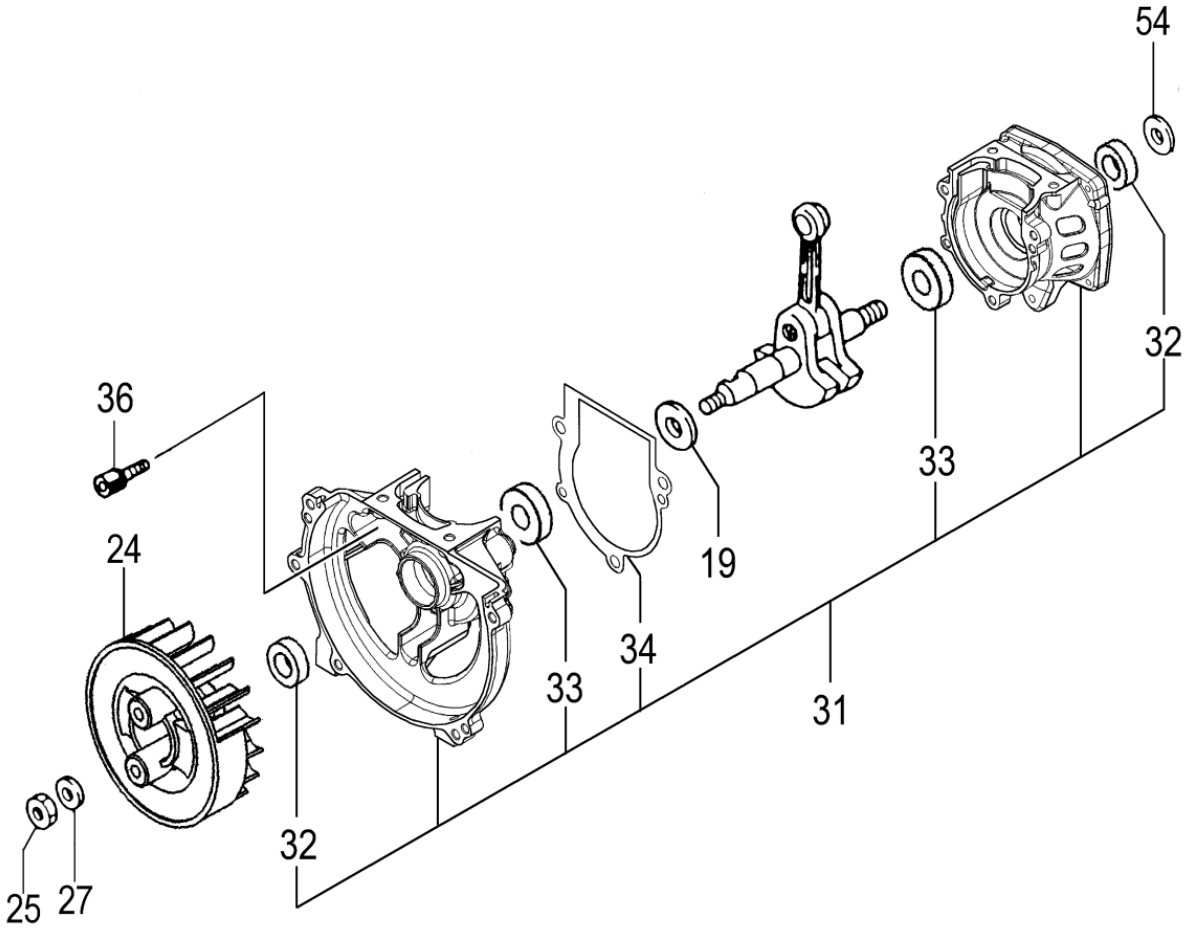

ITEM	PART NUMBER	DESCRIPTION	QTY	COMMENTS
2-19	33000200230	SHIM,12.2X19X.20	1	
2-19	33000200240	SHIM,12.2X19X.30	1	
2-24	1552054980	ROTOR,MAGNETO	1	
2-25	99101080011	NUT,8	1	
2-27	99200080011	WASHER,8	1	
2-31	0720725090	CRANKCASE ASSY	1	Includes bearings, seals and gasket
2-32	99966122206	SEAL,OIL,#TC12227	2	
2-33	99961600115	BEARING,BALL,#6001 C3	2	
2-34	0900725020	GASKET,CRANKCASE	1	
2-36	99461050164	BOLT,HEX,5X16,S	3	
2-54	99201080011	WASHER,8	1	

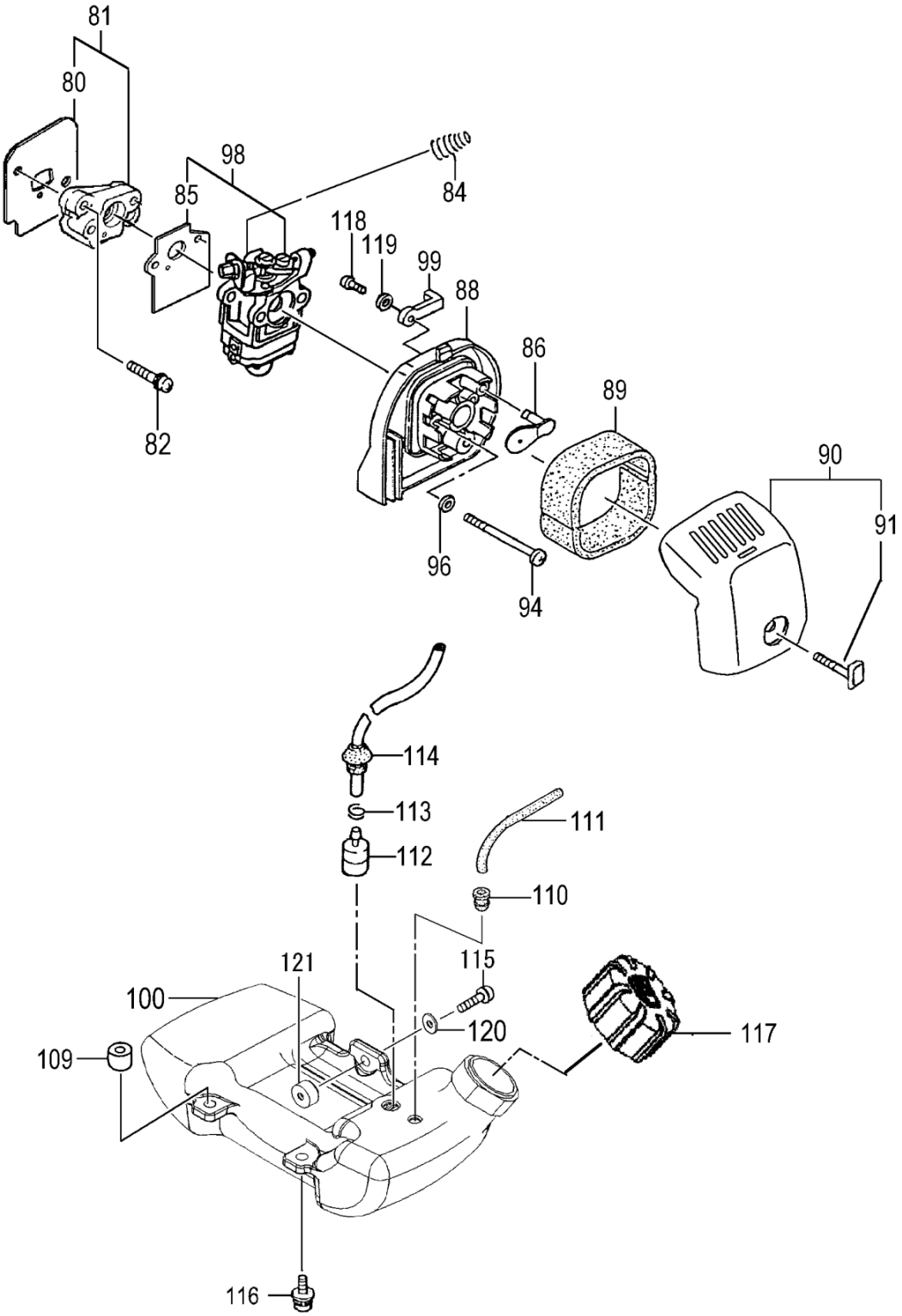
81
80
98
85
84
118
119
99
88
86
89
82
90
91
96
94
114
113
111
112
110
121
115
100
120
117
109
116

ITEM	PART NUMBER	DESCRIPTION	QTY	COMMENTS
3-80	4030702021	GASKET,INLET MANIFOLD	1	
3-81	4040702091	INSULATOR SET	1	Includes gasket
3-82	99464050254	BOLT,HEX HOLE,5X25WS	1	
3-84	90210243200	SPRING,WIRE,RETURN	1	
3-85	4020656A200	GASKET	1	
3-86	5280652N22	PLATE,CHOKE,2.0	1	
3-88	4230652N80	BODY,AIR CLEANER	1	
3-89	4460652N20	CLEANER,ELEMENT	1	
3-90	4520304690	COVER,BLACK	1	
3-91	4500702480	BOLT,CLEANER COVER	1	
3-94	99051050553	BOLT,HEX,5X55	2	
3-95	99210050012	WASHER,S,5	2	
3-96	99200050011	WASHER,SMALL,5	2	
3-98	4550725A90	CARBURETOR SET	1	Includes gasket
3-99	5230652N20	LEVER,CHOKE	1	
3-100	5910725020	TANK,FUEL,WHITE	1	
3-109	65900801200	COLLAR	3	
3-110	53432710200	GROMMET,FUEL PIPE	1	
3-111	70003005350	PIPE,FUEL,3X5X350	1	
3-112	6750404280	FILTER,FUEL	1	
3-113	68000731201	CLIP 6.3	1	
3-114	2230162V900	PIPE,FUEL,3x5x160	1	
3-115	99461050254	BOLT,HEX HOLE,5X25S	1	
3-116	99463050164	BOLT,HEX,5X16,PS	2	
3-117	5950300290	CAP,TANK (BLACK/RED)	1	
3-118	99349040142	SCREW,TAPPING,4x14P	1	
3-119	99201040011	WASHER,4	1	
3-120	99201050061	WASHER,5	1	
3-121	6490725020	COLLAR,TANK	1	

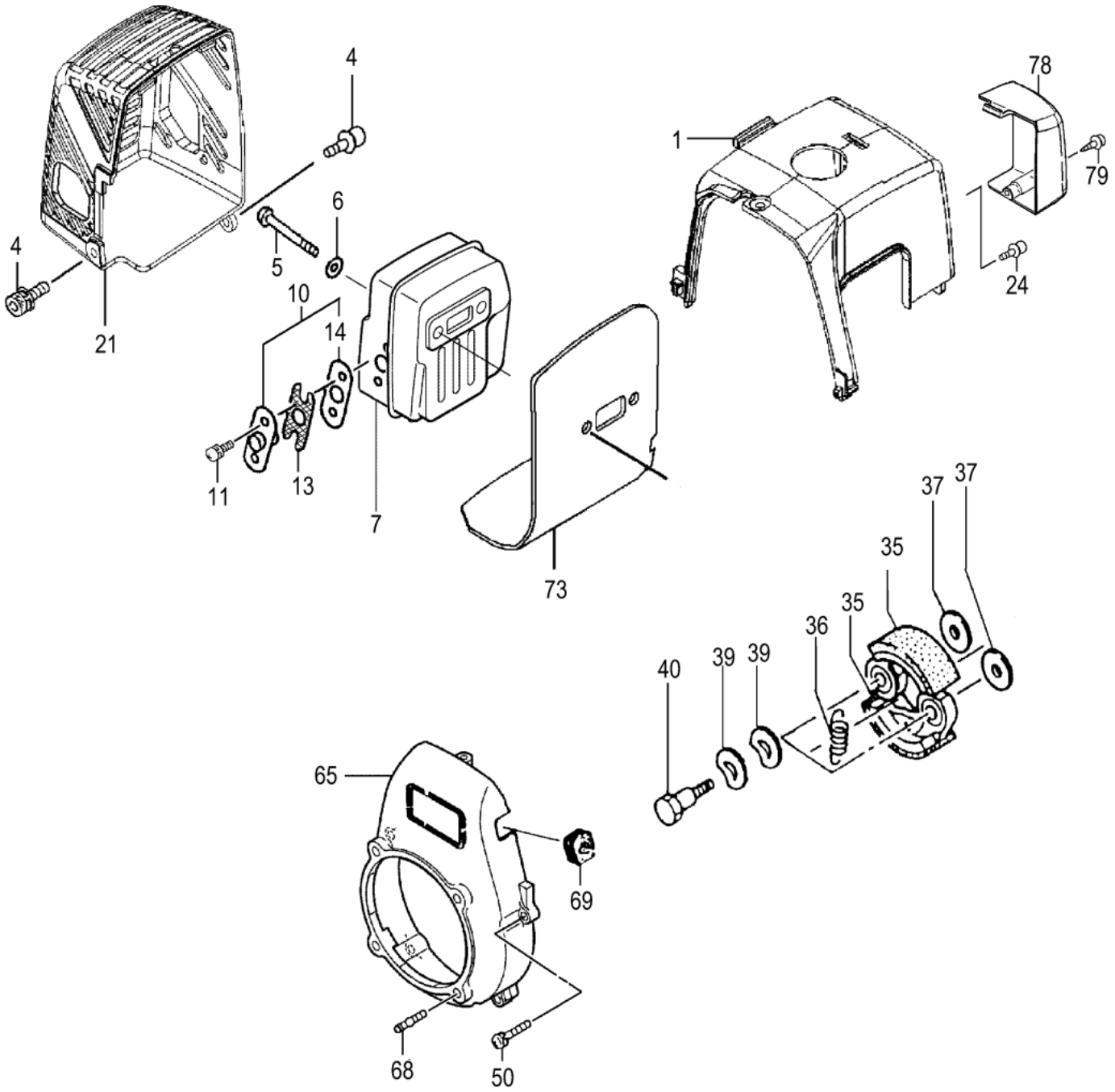
4
78
1
79
6
5
4
24
10
21
14
11
13
7
73
37
37
35
35
36
40
39
39
65
69
68
50

MUFFLER, CLUTCH • FIGURE 4

ITEM	PART NUMBER	DESCRIPTION	QTY	COMMENTS
4-1	0160725020	COVER,CYLINDER	1	
4-4	99463050164	BOLT,HEX,5X16,PS	2	
4-5	99051060653	BOLT,HEX,6x65	2	
4-6	99201060011	WASHER,6	2	
4-7	7060725A80	MUFFLER	1	
4-10	7340740A90	TAIL PIPE SET	1	
4-11	99436040081	SCREW,4X18WS	2	
4-13	7320740A20	ARRESTER,SPARK	1	
4-14	75106500200	GASKET,MUFFLER	2	
4-21	7380725A20	COVER,MUFFLER	1	
4-24	99463040154	BOLT,HEX,4X15,PS	1	
4-35	2900138A80	SHOE,CLUTCH	2	
4-36	3420138A20	SPRING,CLUTCH	1	
4-37	35910112203	WASHER,CLUTCH B	2	
4-39	99204100030	WASHER,WAVE,10	4	
4-40	3570136U200	BOLT,STEP,CLUTCH	2	
4-50	99464050184	BOLT,HEX,5X18,WS	4	
4-65	1120703120	CASE,FAN	1	
4-68	10004001200	BOLT,STUD,6X36	4	
4-69	20311660200	GROMMET,PRIMARY CORD	1	
4-73	1330725020	SHIELD,HEAT	1	
4-78	1320725A20	DEFLECTOR,AIR	1	
4-79	99348040142	SCREW,TAPPING,4x14	1	

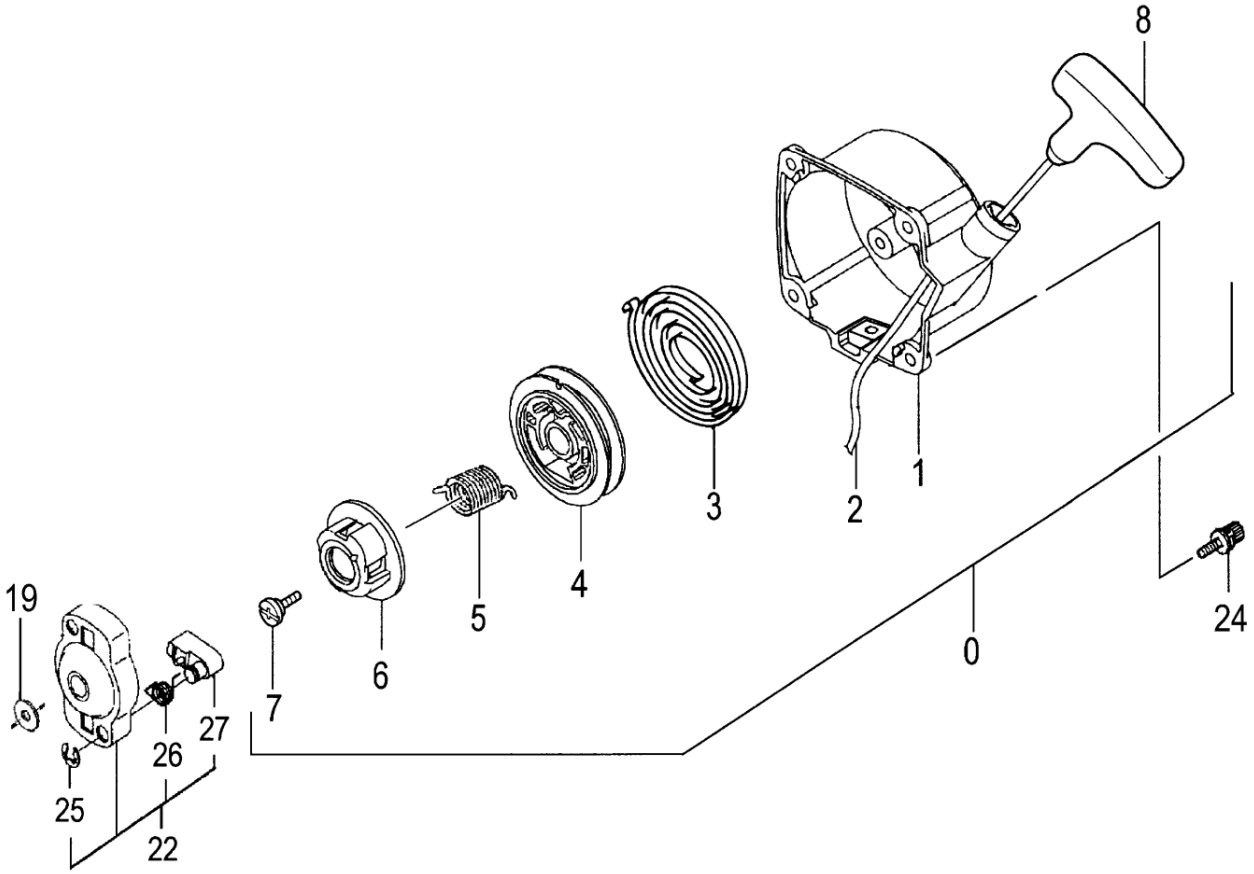

ITEM	PART NUMBER	DESCRIPTION	QTY	COMMENTS
5-0	7620720F92	STARTER ASSY	1	
5-1	7720720F80	BODY,RECOIL STARTER	1	
5-2	7830720F20	ROPE,STARTER	1	
5-3	78006097200	SPRING,RECOIL	1	
5-4	7740720R20	PULLEY,STARTER	1	
5-5	7580651H20	SPRING	1	
5-7	8390304520	SCREW,SET	1	
5-8	7850304520	HANDLE,STARTER	1	
5-19	35910112203	WASHER,CLUTCH B	1	
5-22	7980651H90	PULLEY ASSY,STARTER	1	
5-24	99464040185	BOLT,HEX,4x18WS	4	Not included in starter assembly
5-25	99355050000	RING,STOP,5	2	
5-26	79006097200	SPRING,STARTER PAWL	2	
5-27	7880651H20	SPRING,STARTER	2	

CARBURETOR • FIGURE 6

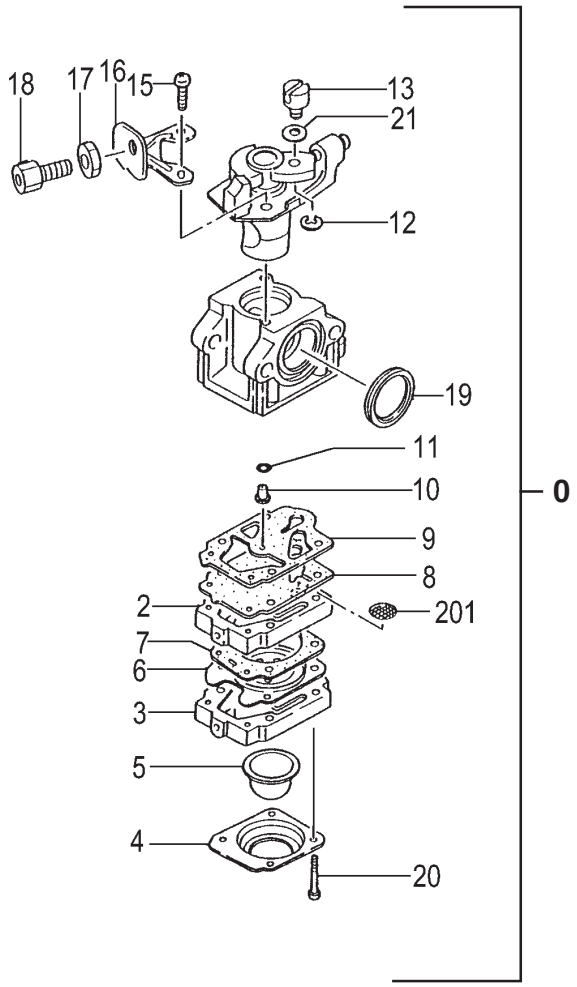

ITEM	PART NUMBER	DESCRIPTION	QTY	COMMENTS
6-0	4550725A90	CARBURETOR SET	1	Includes gasket
6-2	5752515380	BODY,PUMP	1	
6-3	4422515180	PUMP,PRIMING	1	
6-4	4762515120	COVER,DIAPHRAGM	1	
6-5	44725108200	BULB,PRIMING	1	
6-6	~ ~ ~	DIAPHRAGM,METERING	1	~ Included in carb kit #650.25124.900
6-7	~ ~ ~	GASKET,DIAPHRAGM	1	(parts not available individually)
6-8	~ ~ ~	DIAPHRAGM,PUMP	1	
6-9	~ ~ ~	GASKET,PUMP	1	
6-10	5992001W38	JET,MAIN,LONG #38	1	
6-11	55025100200	O-RING	1	
6-12	48925100200	RING,STOP	1	
6-13	53925120200	SWIVEL	1	
6-15	51425100200	SCREW,THROTTLE SET	2	
6-16	54425164200	STAY,ADJUST,CABLE	1	
6-17	99101060013	NUT,6	1	
6-18	61425137200	ADJUSTER,CABLE	1	
6-19	4310634C200	GASKET,CLEANER	1	
6-20	5482515120	SCREW,SET	4	
6-21	5492516520	WASHER,THRUST	1	
6-201	57825007200	SCREEN,INLET	1	

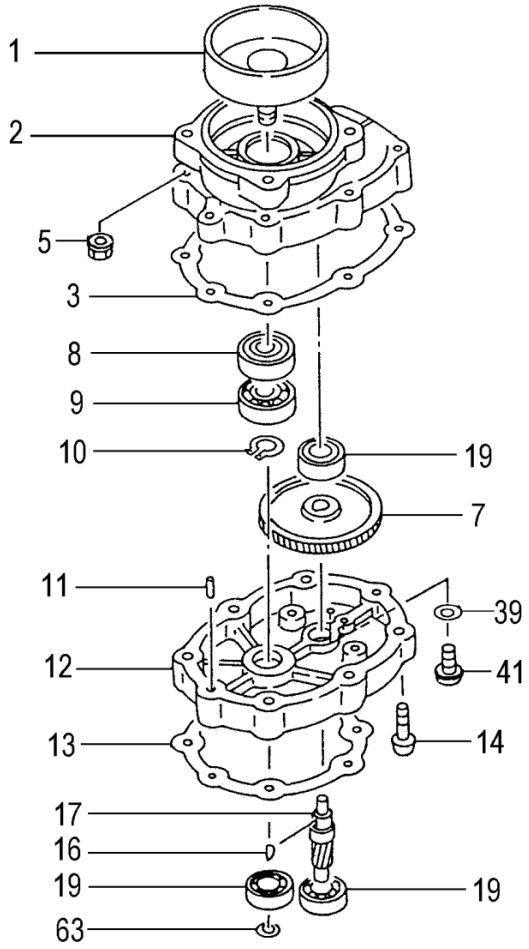

ITEM	PART NUMBER	DESCRIPTION	QTY	COMMENTS
7-1	2263246680	HOUSING,CLUTCH	1	
7-2	20032420200	CASE,GEAR,A	1	
7-3	20432401203	GASKET,GEAR CASE	1	
7-5	99440060011	NUT,SPRING 6	4	
7-7	2213246520	GEAR,#2	1	
7-8	99961620202	BEARING,BALL,#6202Z	1	
7-9	99961620200	BEARING,BALL,#6202	1	
7-10	99350015002	RING,STOP,C-15 EX	1	
7-11	99905041203	PIN,KNOCK,4x12	2	
7-12	20132401203	CASE,GEAR B	1	
7-13	20532401201	GASKET,CASE,GEAR,C	1	
7-14	99414050301	SCREW,5X30/S	2	
7-16	06811000200	KEY,WOODRUFF,3X15X5.0	1	
7-19	99961600000	BEARING,BALL,#6000	3	
7-39	99201060011	WASHER,6	1	
7-41	99011060081	SCREW,6X8	1	
7-63	99350017002	RING,STOP,C17 EX	1	

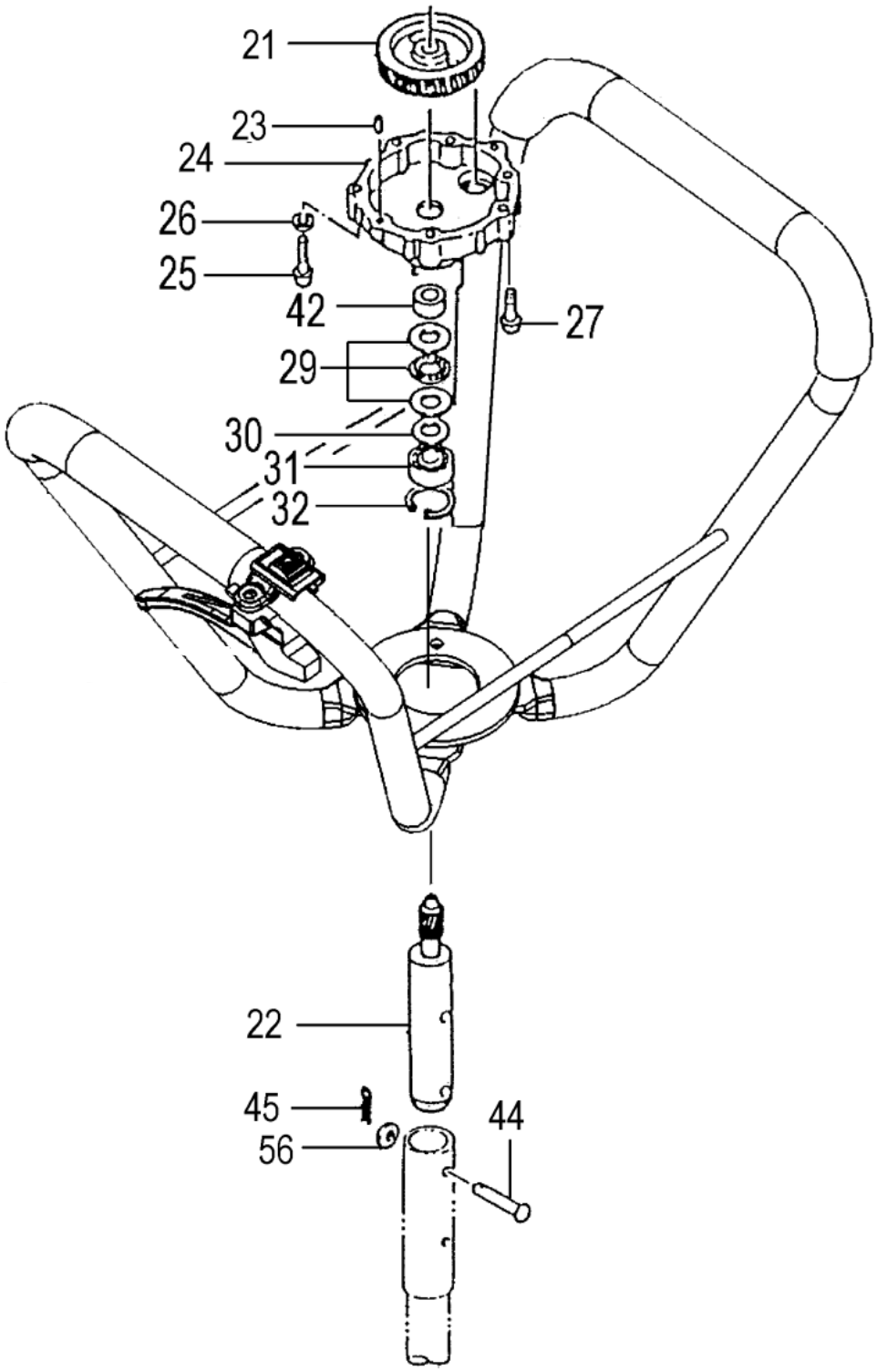
21
23
24
26
25
42
27
29
30
31
32
22
45
56
44

ITEM	PART NUMBER	DESCRIPTION	QTY	COMMENTS
8-21	2233246520	GEAR,#4	1	
8-22	2253246520	SHAFT,DRIVE	1	
8-23	99905041203	PIN,KNOCK,4x12	2	
8-24	2023246520	CASE,GEAR,C	1	
8-25	99011050501	SCREW,5X50	4	
8-26	99210050012	WASHER,S,5	4	
8-27	99414050301	SCREW,5X30/S	2	
8-29	99962203572	BEARING,THRUST,#2035	1	
8-30	2303246520	COLLAR,GEAR SHAFT A	1	
8-31	99961690401	BEARING,BALL,#6904ZZ	1	
8-32	99351037002	RING,STOP,C-37	1	
8-42	2313246520	COLLAR,GEAR SHAFT B	1	
8-44	8203225020	PIN,AUGER,8x50	2	
8-45	ASP-100	PIN,SNAP,EBF/IBH	2	
8-56	99201080011	WASHER,8	2	

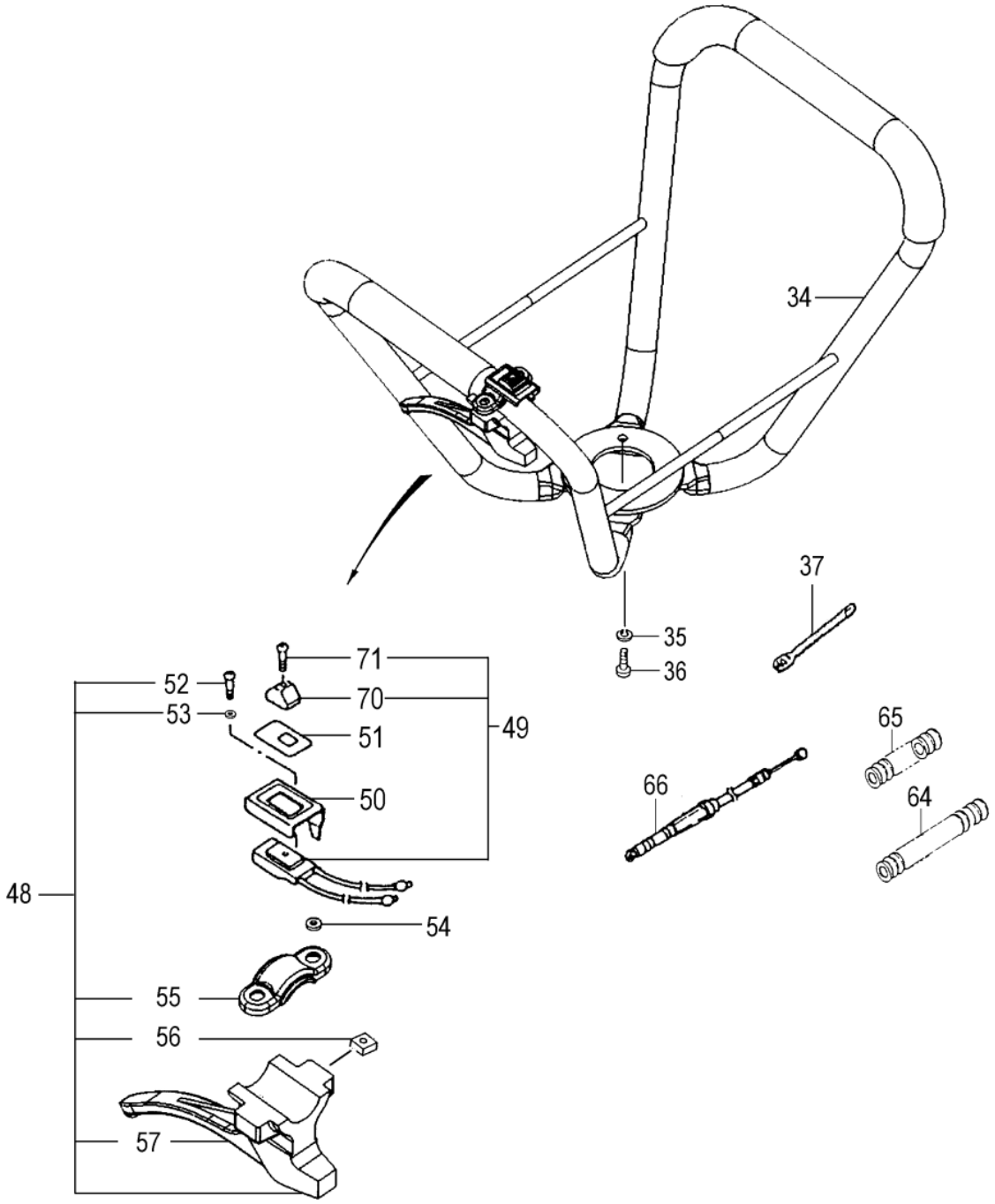
34
37
35
36
71
70
52
53
51
49
50
65
66
64
48
54
55
56
57

ITEM	PART NUMBER	DESCRIPTION	QTY	COMMENTS
9-34	0493247592	HANDLE	1	
9-35	99210060012	WASHER,S,6	4	
9-36	99023060181	BOLT,PLUS,6X18	4	
9-37	19833130200	CLAMP,CORD	4	
9-48	8703247590	LEVER,THROTTLE	1	
9-49	1563247590	SWITCH,STOP	1	
9-50	6403246521	BRACKET,STOP BUTTON	1	
9-51	9253317620	DECAL,STOP BUTTON	1	
9-52	99023060301	BOLT,P,6X30	2	
9-53	99101060011	NUT,6	2	
9-54	87132600200	WASHER,SPECIAL,B	1	
9-55	8833247520	BAND,THROTTLE LEVER	1	
9-56	99191060061	NUT,SQUARE,6	2	
9-57	8803247520	ARM,THROTTLE	1	
9-64	1641004200	TUBE,PROTECTION,10x420	1	
9-65	1641301501	TUBE,PROTECTION,13x150	1	
9-66	8850725A80	WIRE,THROTTLE	1	
9-70	2581165020	BUTTON,STOP	1	
9-71	99431030101	SCREW,3X10	1	

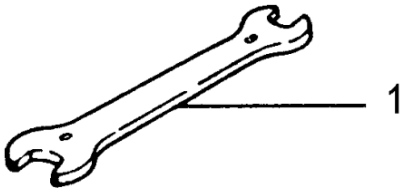

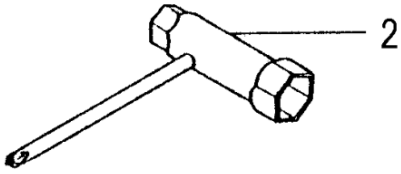

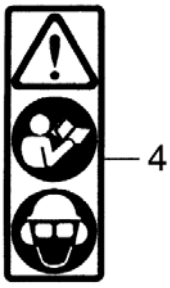

ITEM	PART NUMBER	DESCRIPTION	QTY	COMMENTS
10-1	80820000200	SPANNER,10X13	1	
10-2	03629331501	SPANNER,COMBI	1	
10-3	9060725A20	DECAL,TIA-350PFS	1	
10-4	9203246620	DECAL,CAUTION	1	

PARTS INFORMATION

Earth Bits

2” THRU 12”

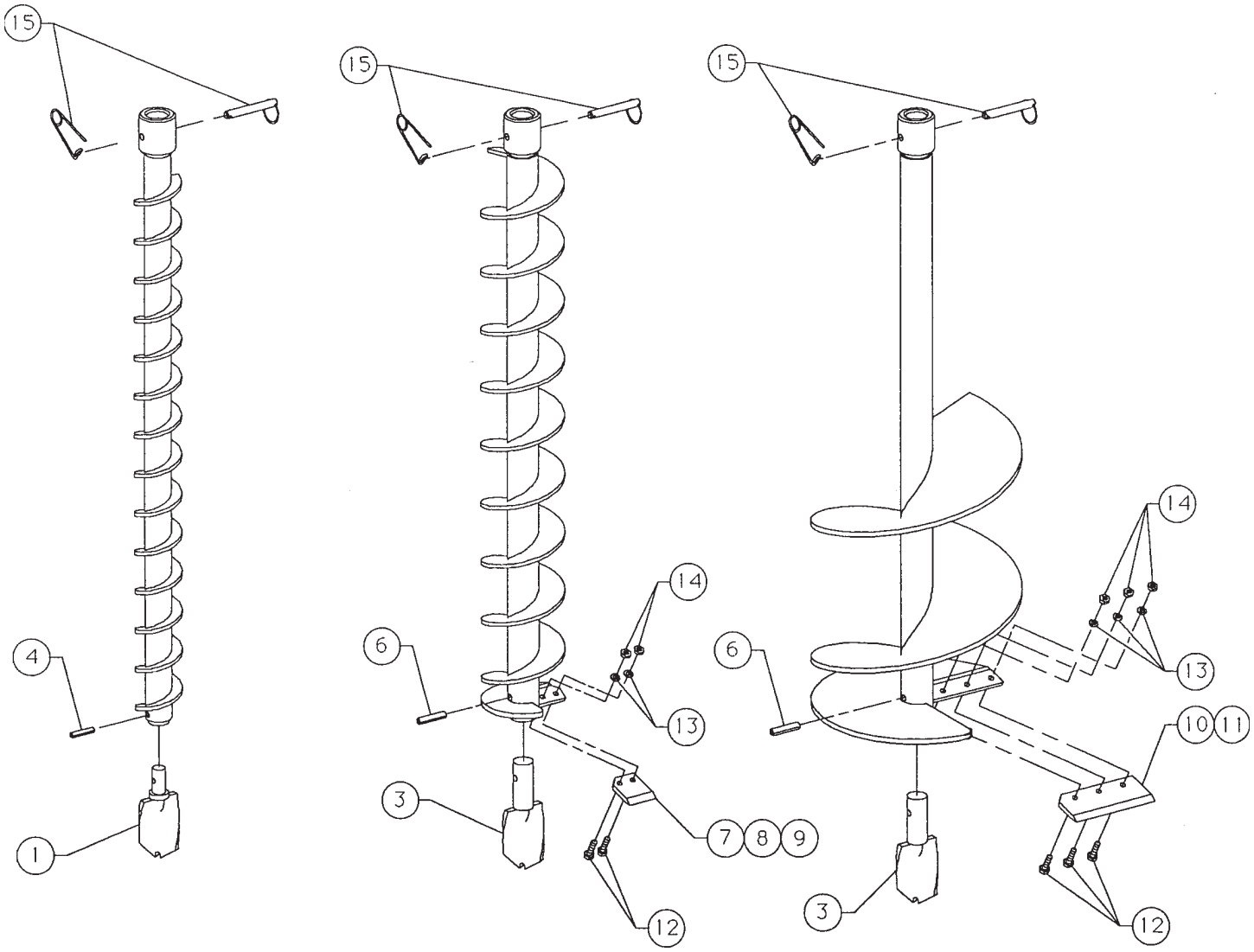

ITEM	PART NUMBER	DESCRIPTION	QTY	APPLICATION	COMMENTS
1	EBF-KIT	BIT,SCREW (EARTH ONLY)	1	EBF-02	
3	EBF-TIP	TIP	1	EBF-04 THRU EBF-12	
4	N/A	PIN,ROLL,1/4"X1-1/4"	1	EBF-02	STD HARDWARE ITEM
6	N/A	PIN,ROLL,5/16"X1-1/2"	1	EBF-04 THRU EBF-12	STD HARDWARE ITEM
7	CB-04	BLADE,4"	1	EBF-04	
8	CB-06	BLADE,6"	1	EBF-06	
9	CB-08	BLADE,8"	1	EBF-08	
10	CB-10	BLADE,10"	1	EBF-10	
11	CB-12	BLADE,12"	1	EBF-12	
12	N/A	SCREW,CAP,HEX,1/4 UNC X 7/8"	2,3	EBF-04 THRU EBF-12	STD HARDWARE ITEM
13	N/A	WASHER,LOCK,1/4"	2,3	EBF-04 THRU EBF-12	STD HARDWARE ITEM
14	N/A	NUT,HEX,1/4-20 UNC	2,3	EBF-04 THRU EBF-12	STD HARDWARE ITEM
15	EBF-PIN	PIN,AUGER	1	ALL AUGERS	
N/A	EBF-EXT	EXTENSION,15"	1	ALL AUGERS	EXTENSION NOT SHOWN

EBF-02 = 745401, EBF-04 = 745402, EBF-06 = 745403, EBF-08 = 745404, 745405 = EBF-10, 745406 = EBF-12

PARTS INFORMATION

Pengo Bits

2” THRU 8" & 12”

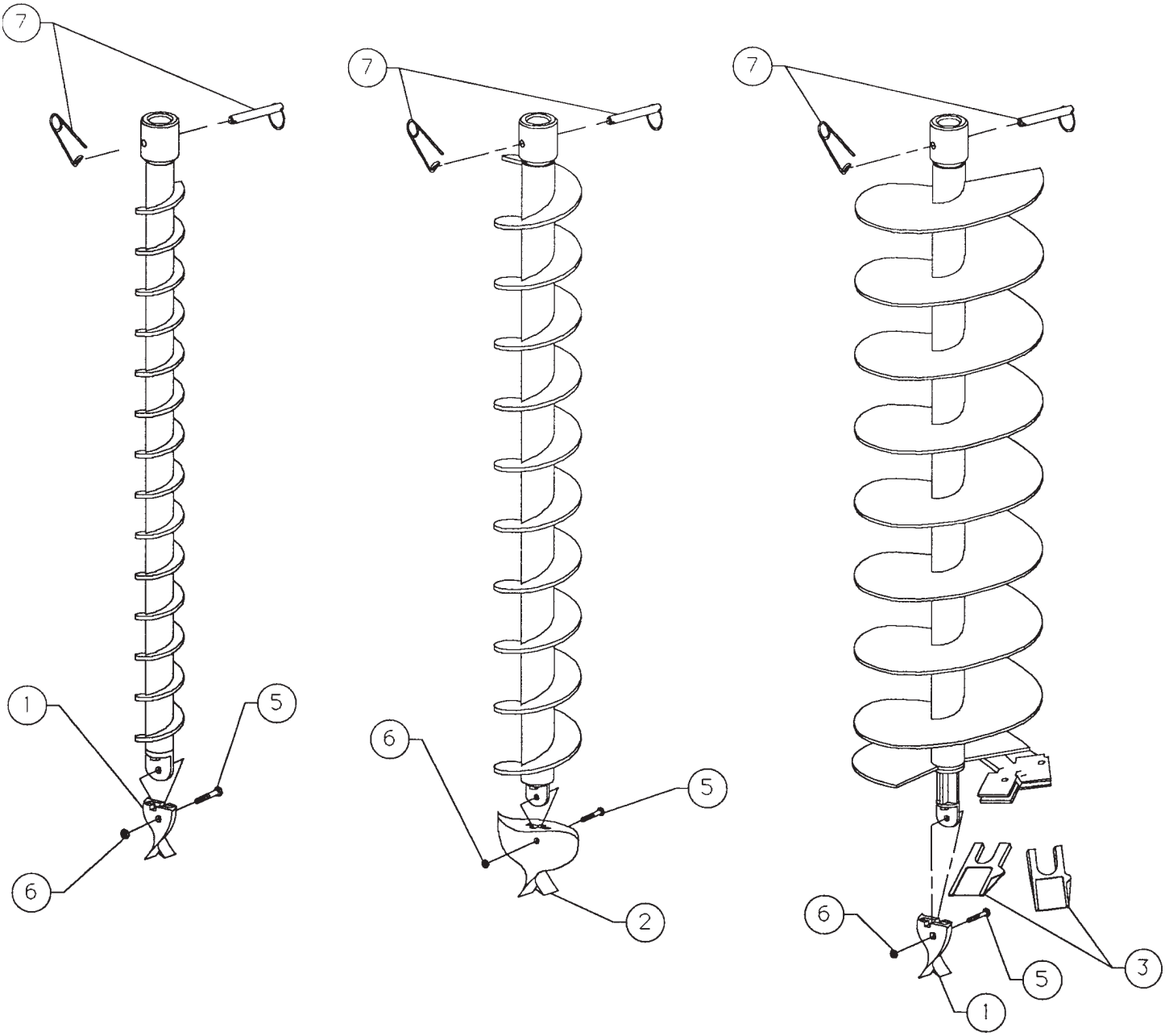

ITEM	PART NUMBER	DESCRIPTION	QTY	APPLICATION	COMMENTS
1	28295	BIT,SCREW (EARTH ONLY)	1	EBF-02P, EBF-06P, EBF-08P, EBF-12P	
3	28185	TOOTH,PENGO	2	EBF-06P, EBF-08P	HARD FACED
5	N/A	SCREW,CAP,5/16" X 1-1/2" UNC	1	ALL AUGERS	STD HARDWARE ITEM
6	N/A	NUT,HEX,5/16" UNC	1	ALL AUGERS	STD HARDWARE ITEM
7	EBF-PIN	PIN,AUGER	1	ALL AUGERS	
N/A	EBF-EXT	EXTENSION,15"	1	ALL AUGERS	EXTENSION NOT SHOWN

PARTS INFORMATION

Ice Bits

6” & 8”

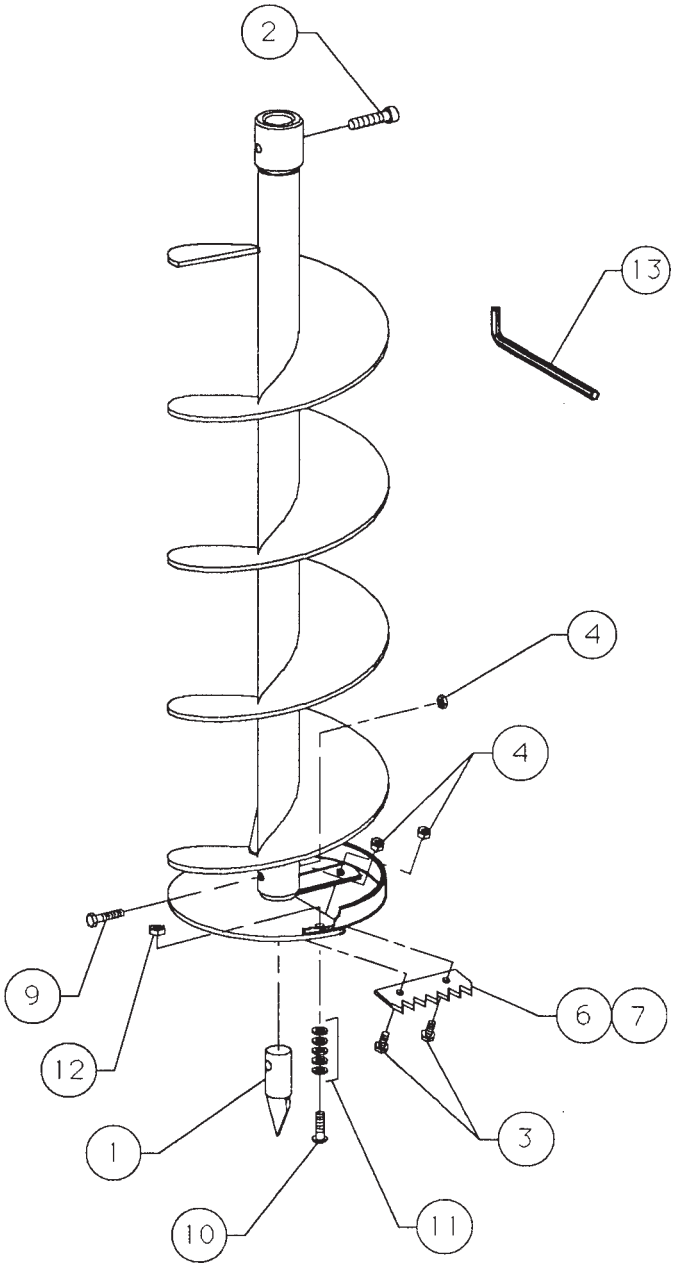

ITEM	PART NUMBER	DESCRIPTION	QTY	APPLICATION	COMMENTS
1	2424-1	BIT,SCREW (ICE ONLY)	1	ALL ICE AUGERS	
2	N/A	SCREW,ALLEN ,5/16"X18X1-1/4	1	ALL ICE AUGERS	STD HARDWARE ITEM
3	N/A	SCREW,CAP,1/4-20X5/8"	2,3	ALL ICE AUGERS	STD HARDWARE ITEM
4	N/A	NUT,HEX,NYLOCK,1/4"	3,4	ALL ICE AUGERS	STD HARDWARE ITEM
6	Y-246	BLADE,6" (ICE ONLY)	1	IBH-06	
7	Y-248	BLADE,8" (ICE ONLY)	1	IBH-08	
9	N/A	SCREW,CAP,1/4-20X1-1/4"	1	ALL ICE AUGERS	STD HARDWARE ITEM
10	N/A	SCREW,CAP,5/16-18X1-1/4"	1	ALL ICE AUGERS	STD HARDWARE ITEM
11	N/A	WASHER,FLAT,1/4"	5	ALL ICE AUGERS	STD HARDWARE ITEM
12	N/A	NUT,HEX,NYLOCK,5/16-18	1	ALL ICE AUGERS	STD HARDWARE ITEM
13	N/A	WRENCH,ALLEN,1/4"	1	ALL ICE AUGERS	STD HARDWARE ITEM
IBH-06 = 745413, IBH-08 = 745414					