HITACHI

LIST NO. E844

ELECTRIC TOOL PARTS LIST

■ CORDLESS DRIVER DRILL 2001· 8·27

Model DS 18DVB (E2)

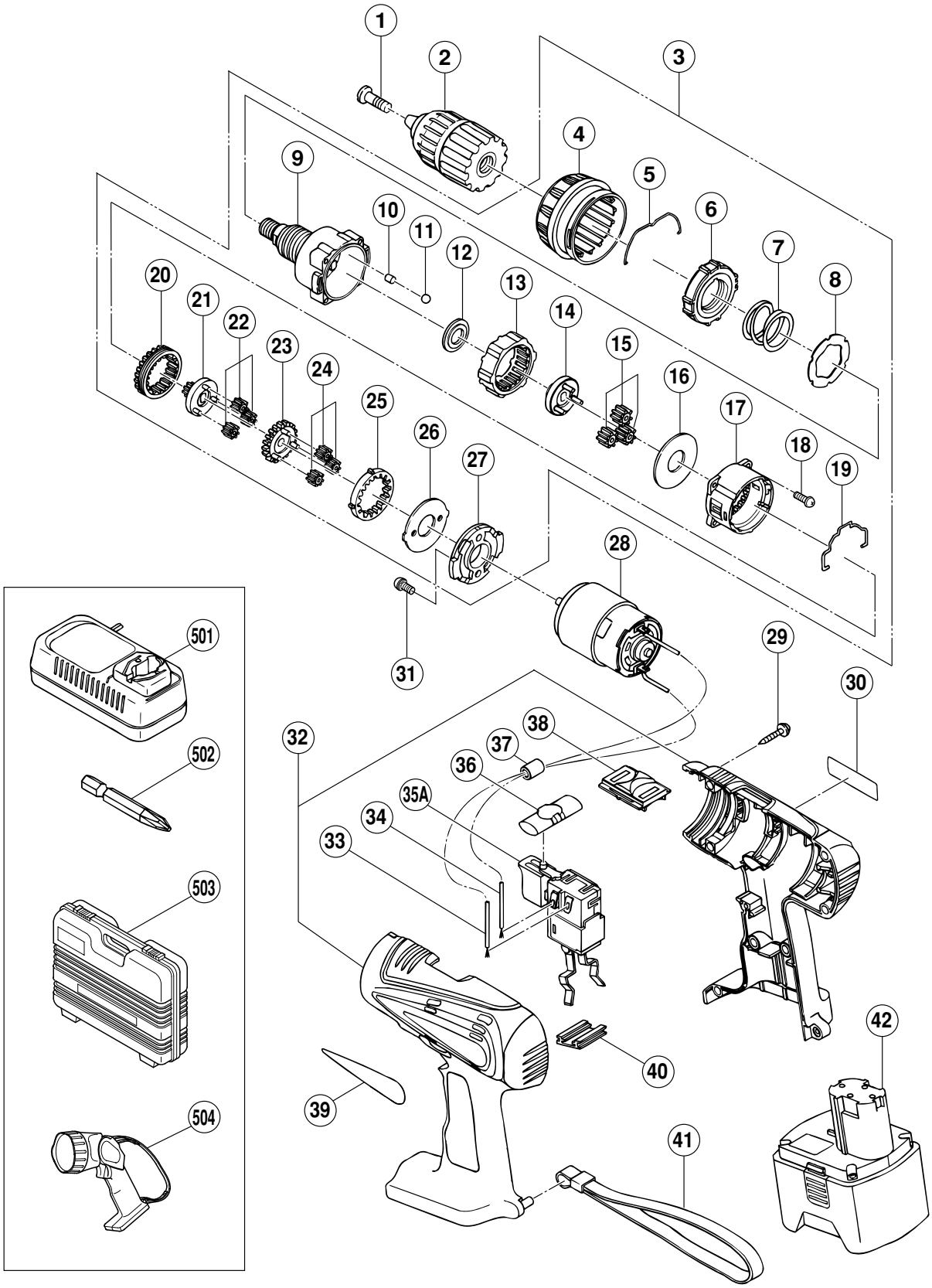

	ITEM NO.	CODE NO.	DESCRIPTION	NO. USED	REMARKS	
	1	311-959	SPECIAL SCREW (LEFT HAND) M6X23	1		
	2	319-766	DRILL CHUCK 13VLRF-N (W/O CHUCK WRENCH)	1		
	3	319-739	GEAR BOX ASS'Y	1	INCLUD.4-27	
	4	319-755	CAP	1		
	5	319-754	CLICK SPRING	1		
	6	319-743	NUT	1		
	7	319-742	SPRING	1		
	8	319-741	THRUST WASHER	1		
	9	319-740	FRONT CASE	1		
	10	319-744	ROLLER	6		
	11	306-936	STEEL BALL D5	6		
	12	319-746	SPACER WASHER	1		
	13	319-745	RING GEAR	1		
	14	319-747	CARRIER	1		
	15	319-769	PLANET GEAR (C) SET (3 PCS.)	3		
	16	312-704	WASHER (A)	1		
	17	319-748	REAR CASE	1		
	18	312-712	SCREW SET D3X12 (4 PCS.)	4		
	19	319-753	SHIFT ARM	1		
	20	319-750	SLIDE RING GEAR	1		
	21	319-749	PINION (C)	1		
	22	319-768	PLANET GEAR (B) SET (3 PCS.)	3		
	23	319-751	PINION (B)	1		
	24	319-767	PLANET GEAR (A) SET (3 PCS.)	3		
	25	319-752	FIRST RING GEAR	1		
	26	312-716	WASHER (B)	1		
	27	316-955	MOTOR SPACER	1		
	28	319-756	MOTOR	1		
	29	991-672	TAPPING SCREW (W/WASHER) D3X16	8		
*	30		NAME PLATE	1		
	31	317-333	MACHINE SCREW (W/SP. WASHER) M4X6	2		
	32	319-761	HOUSING (A).(B) SET	1		
*	33	319-759	INTERNAL WIRE (BLACK) 100L	1		
*	33	320-159	INTERNAL WIRE (BLACK) 160L	1	EXCEPT FOR NZL,AUS,USA,CAN	
	34	319-758	INTERNAL WIRE (RED) 130L	1		
	35A	320-091	DC-SPEED CONTROL SWITCH	1		
	36	319-760	PUSHING BUTTON	1		
*	37	318-247	FERRITE CORE	1	EXCEPT FOR NZL,AUS,USA,CAN	
	38	318-234	SHIFT KNOB	1		
	39		HITACHI LABEL	1		
	40	315-141	TERMINAL SUPPORT (A)	1		
	41	306-952	STRAP (BLACK)	1		
*	42	319-764	BATTERY EB 1820 (W/ENGLISH N.P)	1		
*	42	319-762	BATTERY EB 1820 (W/ENGLISH N.P)	1	FOR NZL	
*	42	319-763	BATTERY EB 1820 (W/ENGLISH N.P)	1	FOR USA,CAN	
*	42	319-765	BATTERY EB 1830H (W/ENGLISH N.P)	1		

STANDARD ACCESSORIES

ITEM NO.	CODE NO.	DESCRIPTION	NO. USED	REMARKS	
501		CHARGER (MODEL UC 24YFA)	1		
502	318-236	+ DRIVER BIT NO.2 55L	1		
503	319-770	CASE	1		
504		TORCHLIGHT (MODEL UB 18D)	1		

OPTIONAL ACCESSORIES

ITEM NO.	CODE NO.	DESCRIPTION	NO. USED	REMARKS	
601	873-929	WRENCH 14MM	1		

* ALTERNATIVE PARTS

ITEM NO.	CODE NO.	DESCRIPTION	NO. USED	REMARKS	