metabo HPT

ELECTRIC TOOL PARTS LIST

■ CORDLESS IMPACT WRENCH 2022 • 12 • 21

Model WR 36DF (E1)

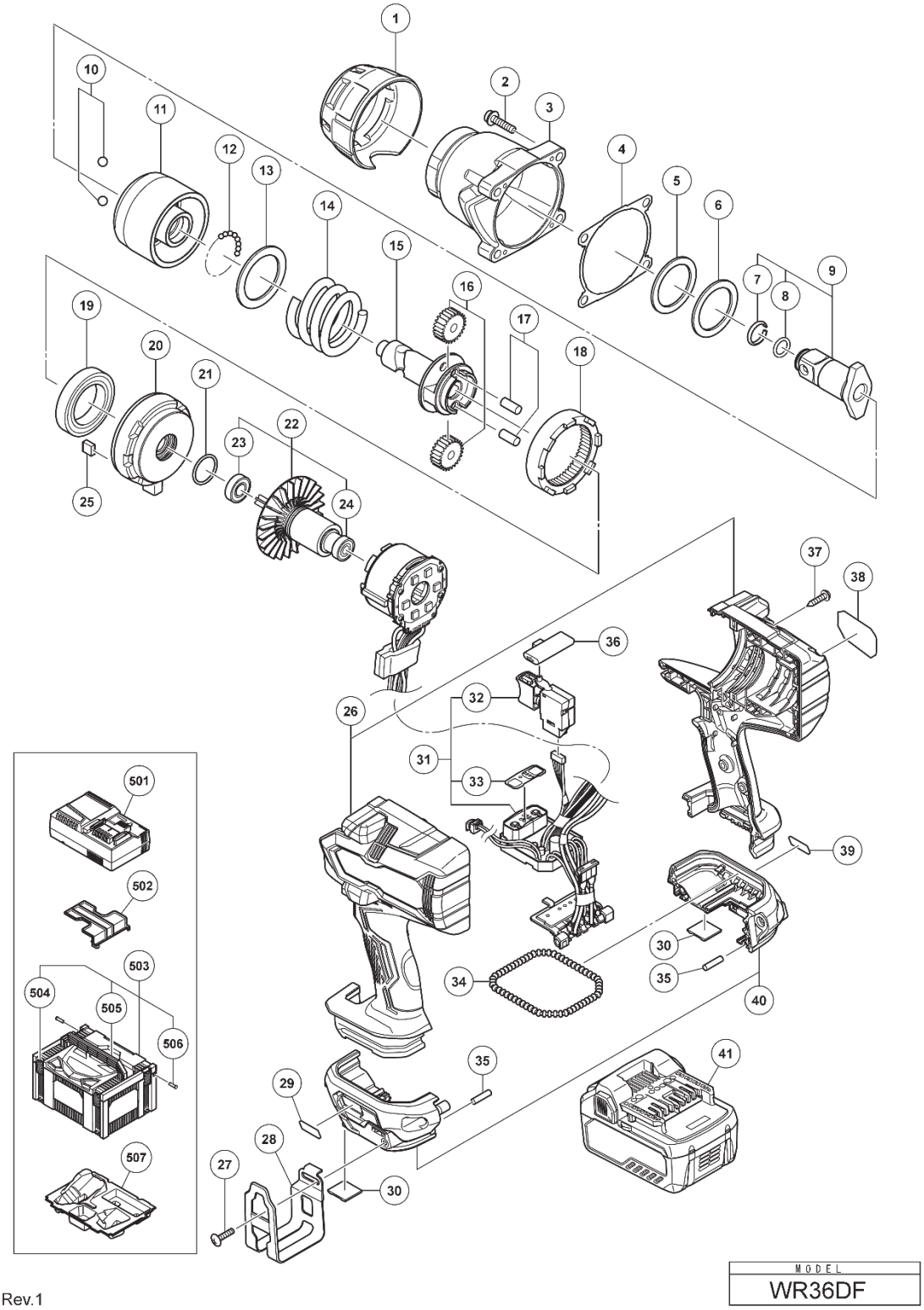

Rev.1

PARTS

WR36DF

ITEM NO.	CODE NO.	DESCRIPTION	NO. USED	REMARKS
1	379595	FRONT CAP	1	
2	373377	HEX. SOCKET HD. BOLT (W/FLANGE) M6X30	4	
3	379596	HAMMER CASE	1	
4	379886	PACKING	1	
5	379597	THRUST DAMPER	1	
6	379598	WASHER (F)	1	
7	373034	FRICTION RING (C)	1	
8	996407	O-RING (1AP-12)	1	
9	379599	ANVIL (A) ASS'Y	1	INCLUD.7.8
10	959151	STEEL BALL D7.14 (10 PCS.)	2	
11	379601	HAMMER	1	
12	959155	STEEL BALL D3.97 (10 PCS.)	36	
13	373038	WASHER (J)	1	
14	379602	HAMMER SPRING	1	
15	379603	SPINDLE	1	
16	373300	IDLE GEAR SET (2 PCS.)	2	
17	373049	NEEDLE ROLLER	2	
18	373047	RING GEAR	1	
19	334310	BALL BEARING 6907 2RS	1	
20	379604	INNER COVER	1	
21	887302	O-RING (I.D 21.5)	1	
22	361207	ROTOR ASS'Y	1	INCLUD.23.24
23	371033	BALL BEARING 6900VVCM	1	
24	607VVC	BALL BEARING 607VV	1	
25	379605	FELT	1	
**26	373031M	HOUSING (A).(B) SET	1	FOR USA.CAN
27	373378	TRUSS HD. SCREW M4 (BLACK)	1	
28	373035	HOOK	1	
29	379350	MV LABEL (B) (2)	1	
30	373040	SIDE BUMPER	2	
31	379608	WIRING ASS'Y	1	INCLUD.32.33
32	378620	DC-SPEED CONTROL SWITCH	1	
33	377346	PANEL SHEET (B)	1	
34	379610	JOINT RUBBER	1	
35	373041	REAR BUMPER	2	
36	373301	PUSHING BUTTON	1	
37	339250	TAPPING SCREW (W/FLANGE) D4X20	9	
38		NAME PLATE	1	
39	379349	MV LABEL (A) (2)	1	
40	379606	HOUSING PLATE SET	1	

STANDARD ACCESSORIES

WR36DF

ITEM NO.	CODE NO.	DESCRIPTION	NO. USED	REMARKS

OPTIONAL ACCESSORIES

ITEM NO.	CODE NO.	DESCRIPTION	NO. USED	REMARKS
601	306927	SILICONE RUBBER	1	
602	309922	GREASE (ATTOLUB MS NO.2) 500G	1	
603	325149	GREASE (MOLUB-ALLOY NO.777-1) 75G	1	
**604	371751M	BATTERY BSL 36A18 (USA.CAN)	1	INCLUD.502 FOR METABOHPT